MAXDRV® SERIES

SQUARE DRIVE
TORQUE WRENCHES

MAXDRV Series Square Drive Torque Wrenches offer a compact design, constructed of aluminum alloy and high strength steel alloy for increased strength and durability while minimizing the weight. The MAXDRV Series offers a torque range of 64 ft-lbs. to 32,523 ft-lbs. (86 Nm - 44,095 Nm).

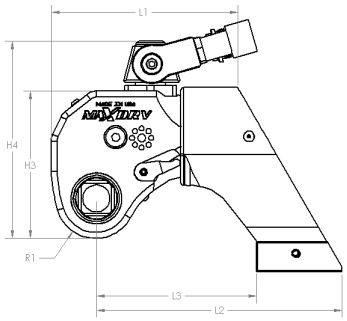

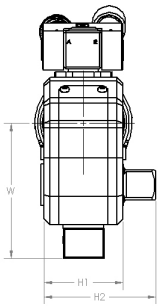

MAXDRV SPECIFICATIONS

Model	.7MD		1MD		3MD		5MD		10MD		17MD		32MD	
Torque (ft-lbs.)	64 - 793		125 - 1,318		308 - 3,167		525 - 5,480		1,050 - 11,206		1,653 - 18,446		2,957 - 32,523	
Torque (Nm)	86 - 1,076		169 - 1,787		418 - 4,294		712 - 7,430		1,423 - 15,193		2,241 - 25,009		4,009 - 44,095	
Drive	.75”		.75”		1.00”		1.50”		1.50”		2.50”		2.50”	
Weight	3.2 lbs	1.45 kg	5 lbs	2.27 kg	11 lbs	5.00 kg	18 lbs	8.16 kg	32 lbs	14.51 kg	61 lbs	27.67 kg	98 lbs	44.55 kg
L1	3.90”	99.1 mm	4.83”	122.7 mm	6.18”	157.0 mm	7.47”	189.7 mm	9.36”	237.7 mm	10.85”	275.6 mm	13.34”	338.8 mm
L2	5.08”	129.0 mm	6.23”	158.2 mm	8.13”	206.5 mm	9.73”	247.1 mm	12.22”	310.4 mm	14.20”	360.7 mm	17.41”	442.2 mm
L3	3.32”	84.3 mm	4.11”	104.4 mm	5.31”	134.9 mm	6.41”	162.8 mm	8.02”	203.7 mm	9.19”	233.4 mm	11.41”	289.8 mm
H1	1.62”	41.1 mm	1.97”	50.0 mm	2.63”	66.8 mm	3.16”	80.3 mm	3.95”	100.3 mm	4.63”	117.6 mm	5.63”	140.0 mm
H2	2.56”	65.0 mm	2.88”	73.2 mm	3.72”	94.5 mm	4.93”	125.2 mm	5.75”	146.1 mm	6.98”	177.3 mm	8.10”	205.7 mm
H3	3.02”	76.7 mm	3.77”	95.8 mm	4.88”	124.0 mm	5.97”	151.6 mm	7.35”	186.7 mm	8.50”	215.9 mm	10.47”	265.9 mm
H4	4.29”	108.9 mm	4.97”	126.2 mm	6.46”	164.1 mm	7.71”	195.8 mm	9.04”	229.6 mm	10.36”	263.1 mm	12.17”	309.1 mm
W	1.50”	38.1 mm	3.45”	87.6 mm	4.49”	114.1 mm	5.39”	136.9 mm	6.73”	170.9 mm	7.82”	198.6 mm	9.60”	243.8 mm
R1	.83”	21.1 mm	1.04”	26.4 mm	1.31”	33.3 mm	1.63”	41.4 mm	2.03”	51.6 mm	2.32”	58.9 mm	2.88”	73.2 mm

For more information visit
TorsionX.com

MADE IN THE USA